Multi-Phase Current Mode Step-Up SEPIC Controller

Isabella Murillo, Dylan Thornburg, Akira Zone

2026

Winter Quarter

Non-inverting Buck-Boost formula:

$$\frac{V_{out}}{V_{in}} = \frac{D}{1-D}$$

Simplified Single-Phase Circuit Topology

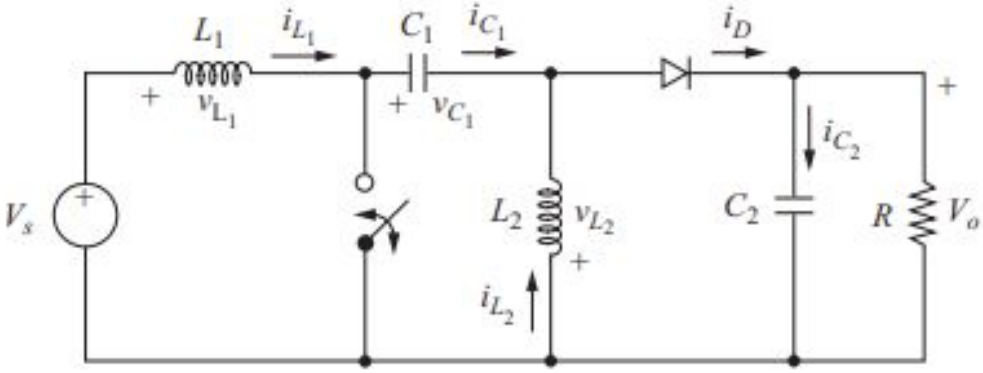

(a)

How it works

Simplified Polyphase Circuit Topology -Switch ON

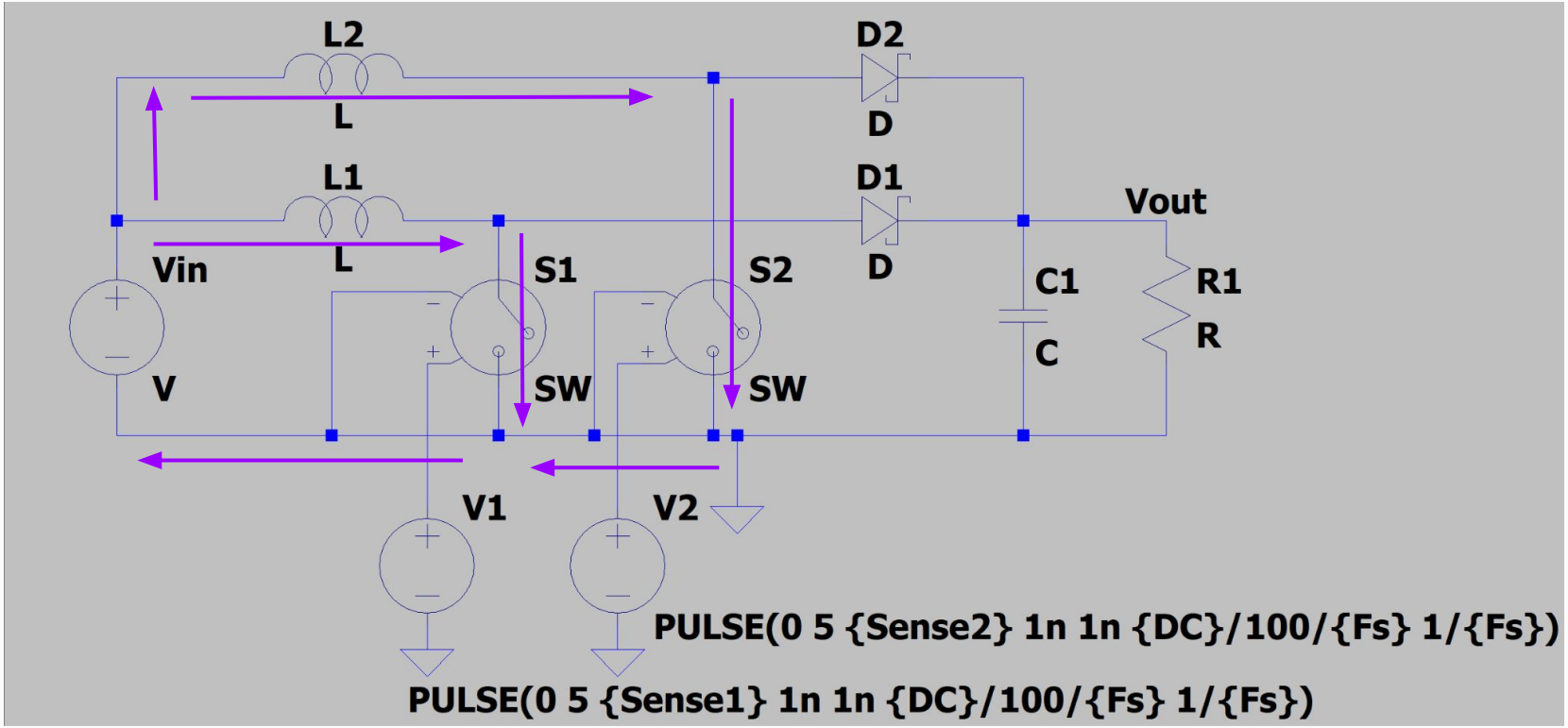

How it works

Simplified Polyphase Circuit Topology -Switch OFF

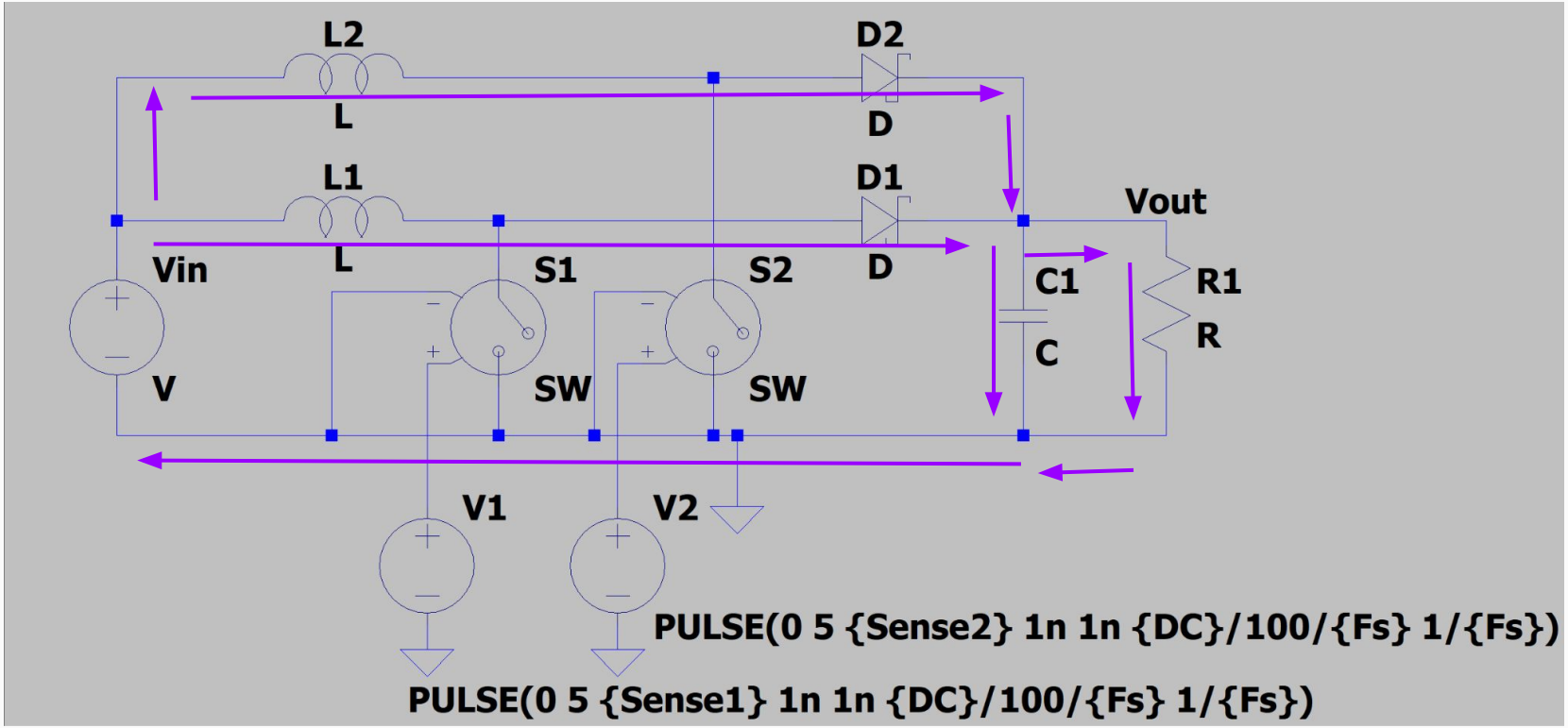

Unique features and Characteristics

- Buck-Boost behavior without inverting.
- Two-phase (interleaved) constant-frequency, peak current-mode control.
  - High efficiency
  - Component stress is more shared
- Programmable limits/knobs commonly used in design validation:
  - Adjustable Max duty-cycle limit (Dmax)
  - Soft-start (SS) pin for controlled startup by ramping allowed peak current.
  - Programmable switching frequency via a resistor (Freq)
- Peak Current-Mode Control for fast transient response
- SEPIC Converter Topology

LTSpice Schematic – LTC3862-2_DC1891.asc

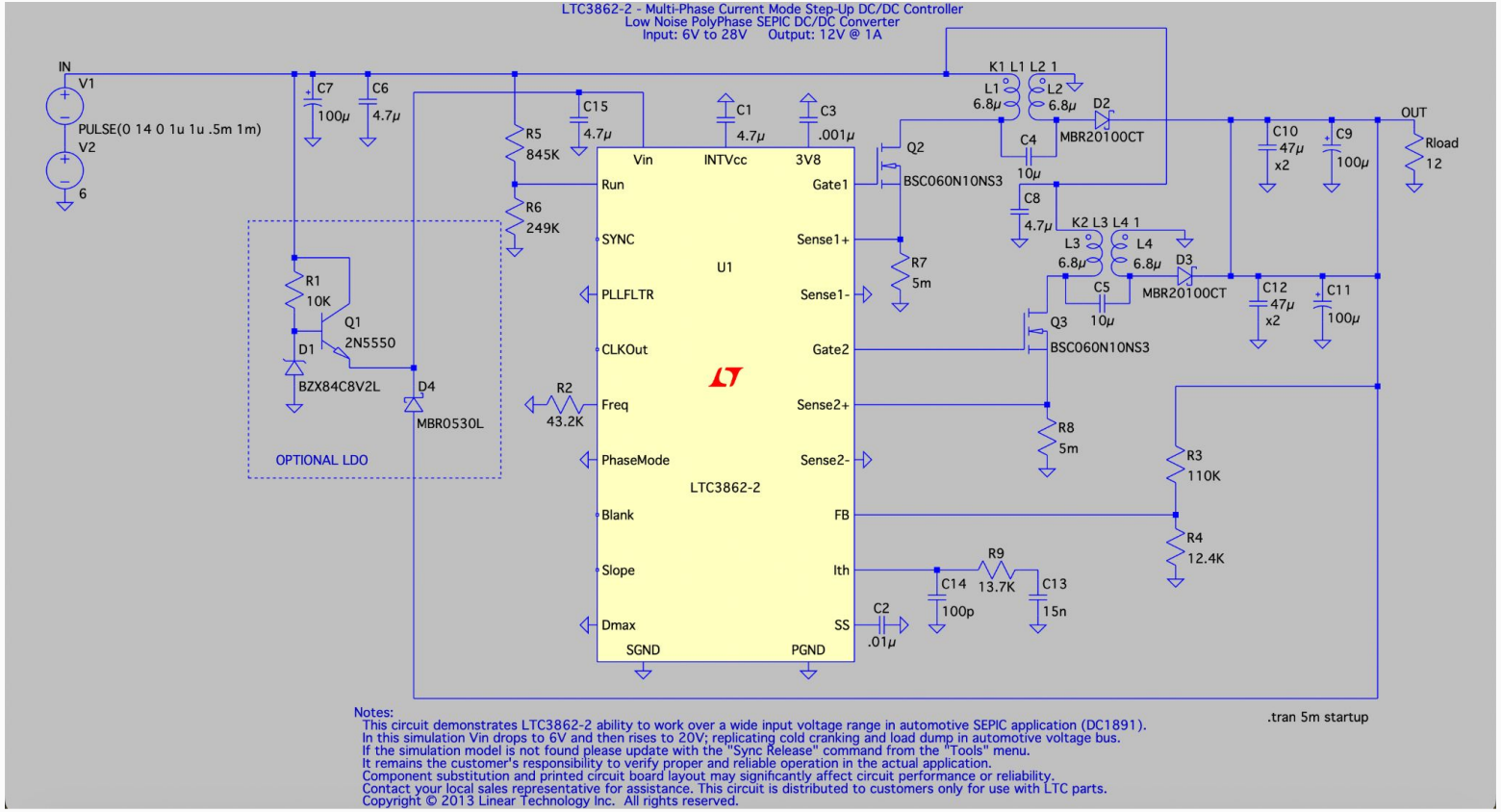

What are the components that make the converter work?

- Buck (step-down) converter
- For the converter to work:

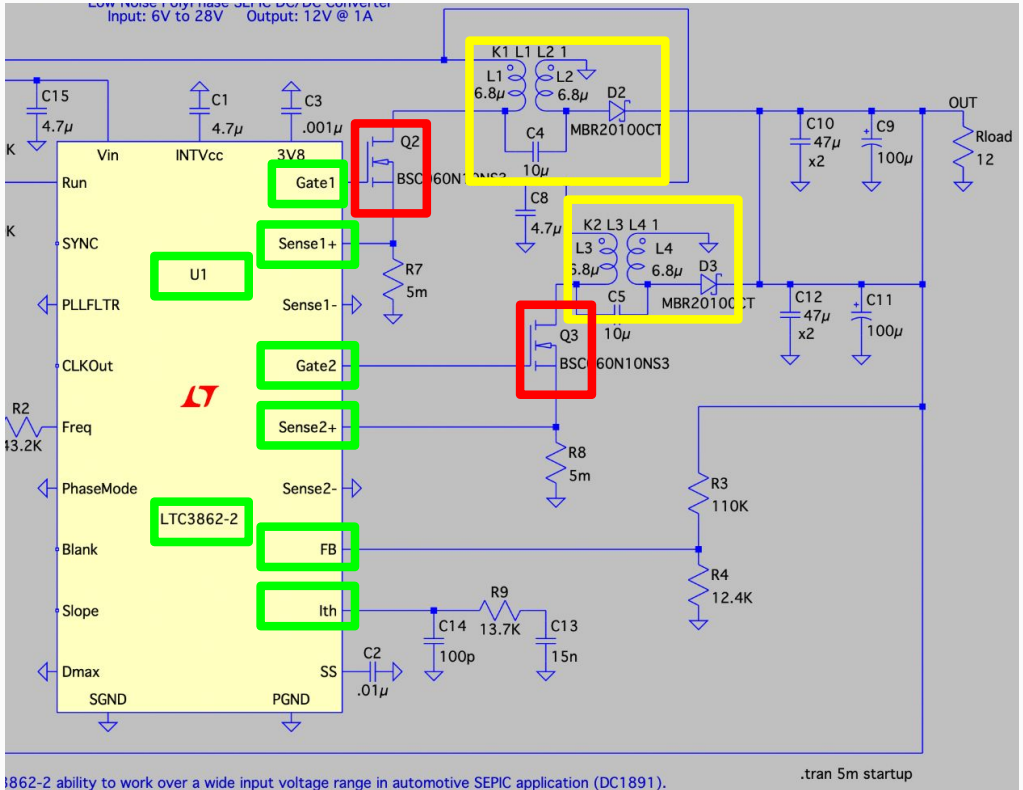

Input Voltage, Output Voltage Relationship

6V DC Input:

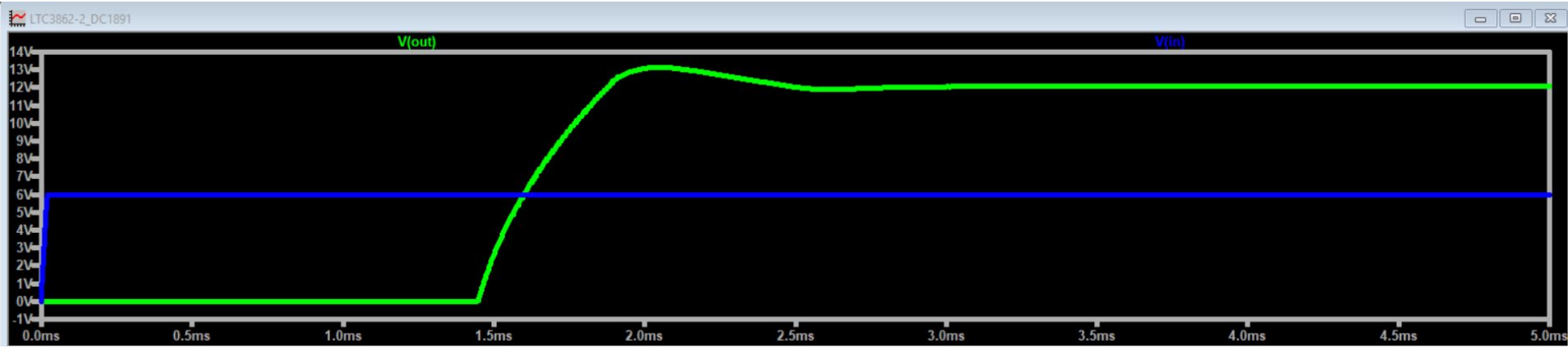

24V DC Input:

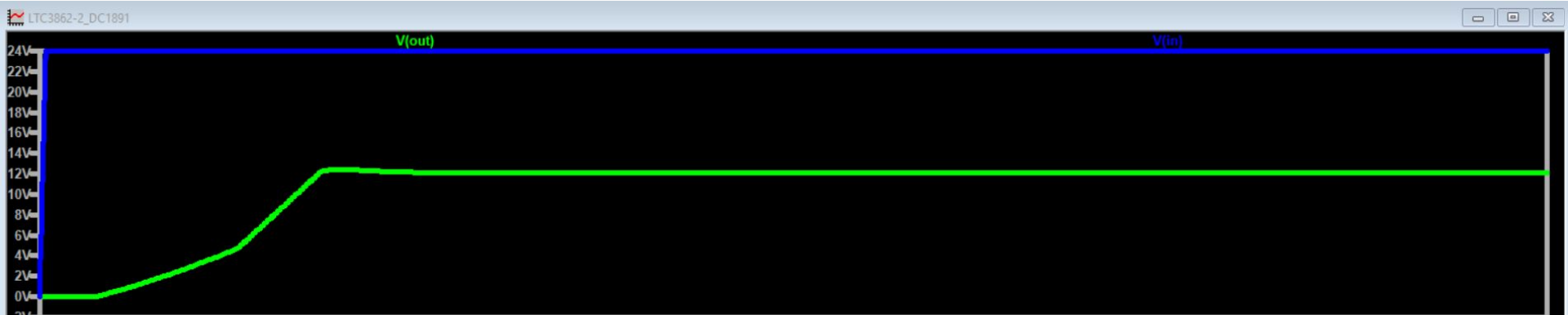

Input Voltage, Output Voltage Relationship

Changing DC Voltage

DC Offset 6V (default)

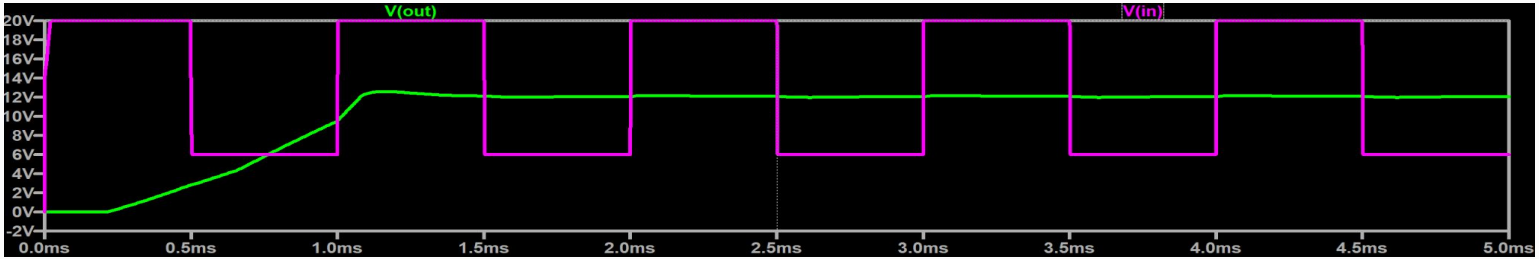

DC Offset 0V

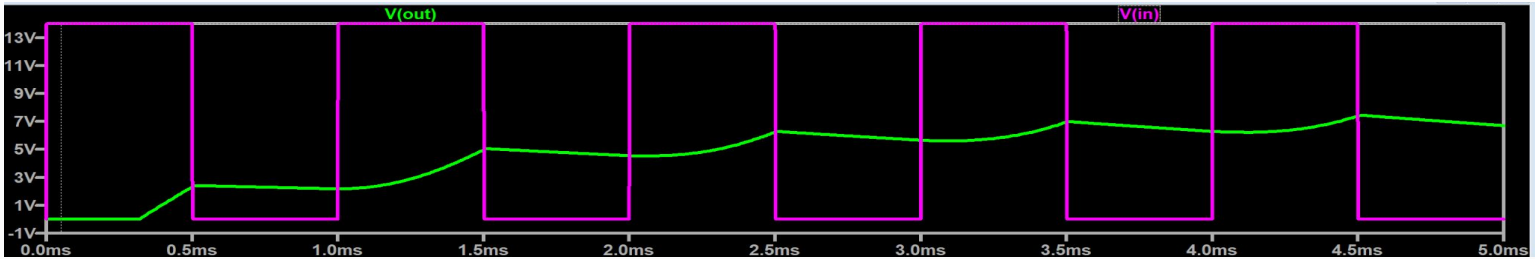

DC Offset 12V

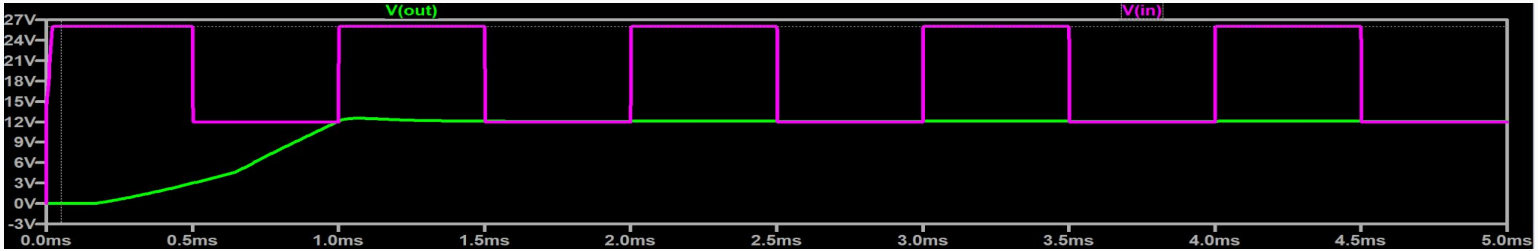

Changing V2

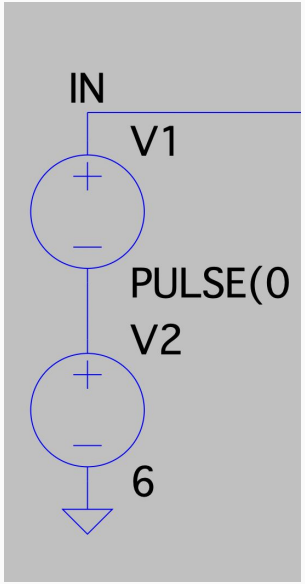

Soft Start

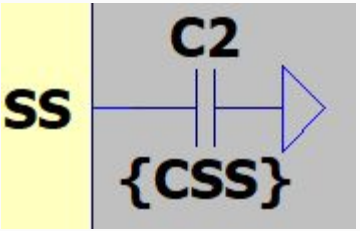


```
.step param CSS 0.01u 0.45u 0.15u
```

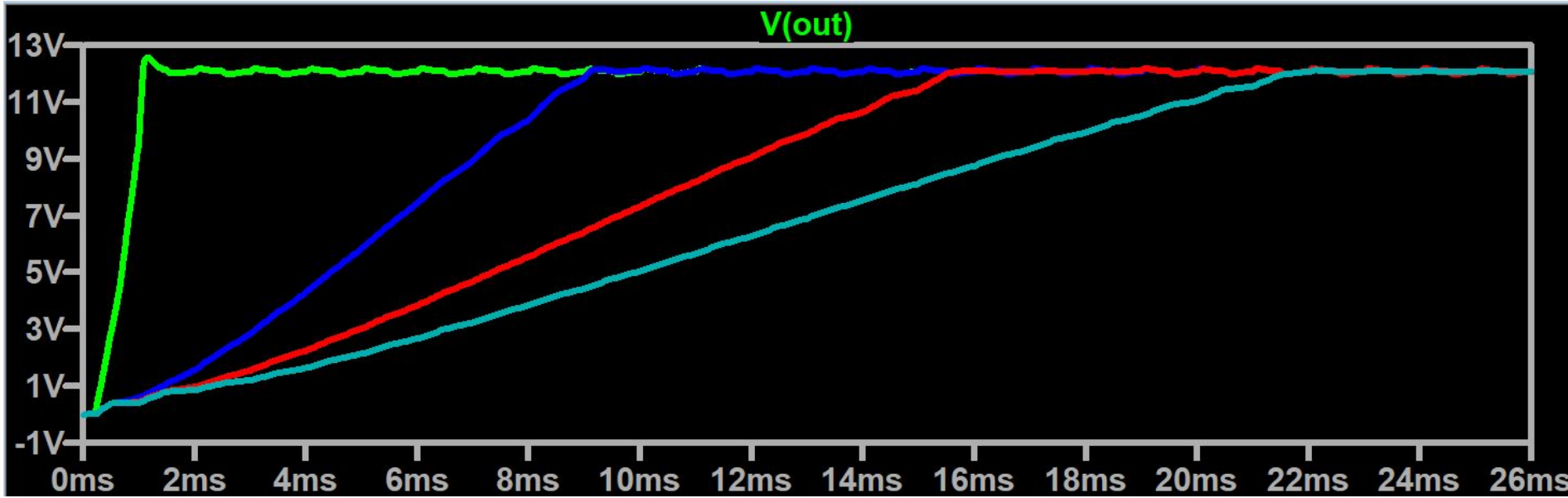

Phase Behavior

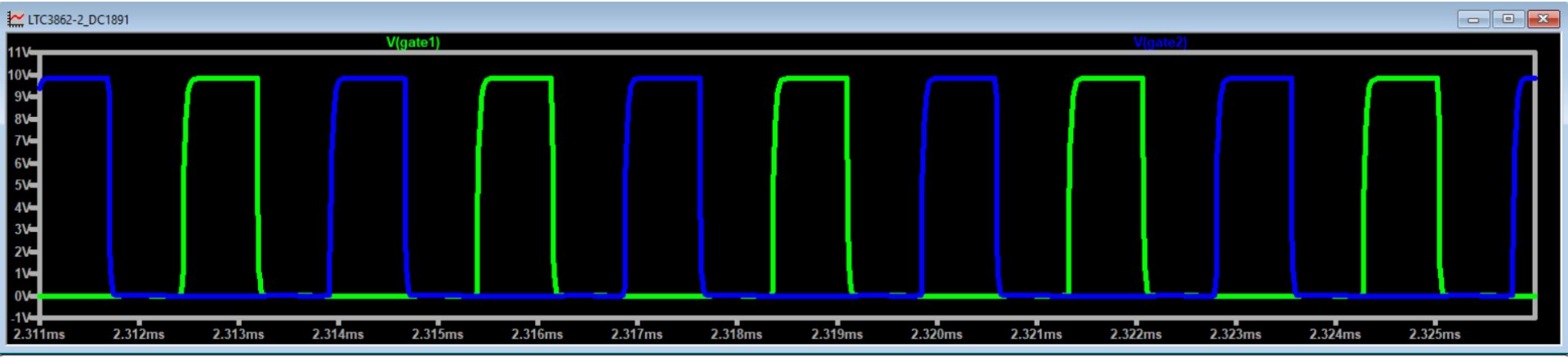

Differing phases at the gate drives demonstrate interleaved operation (polyphase behavior).

Feedback Path

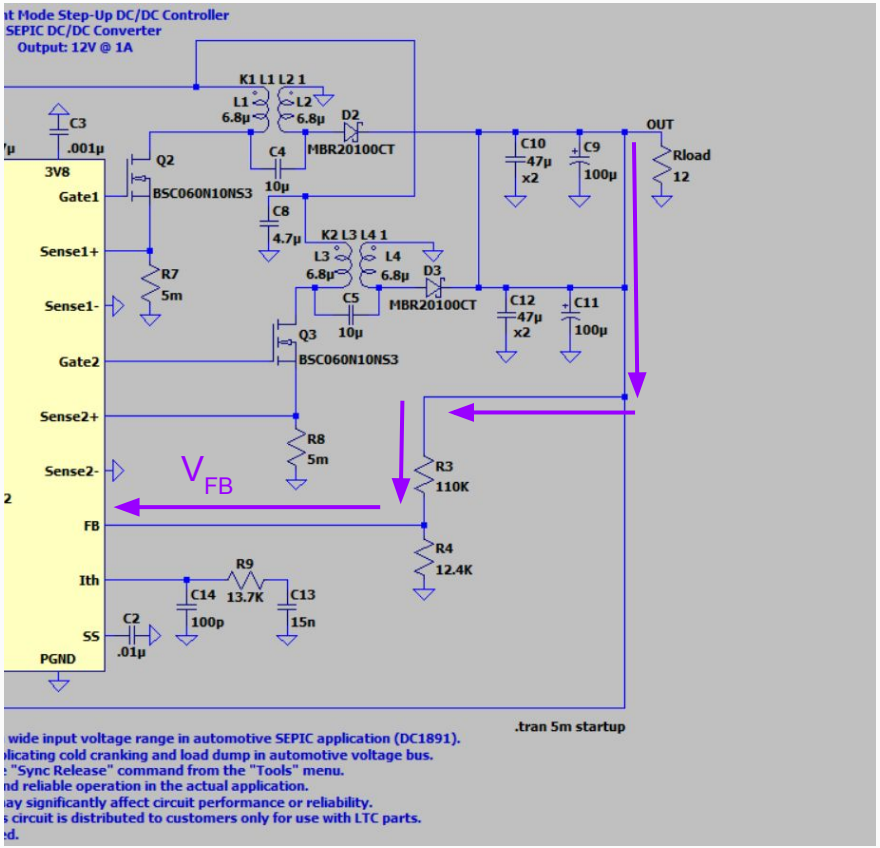

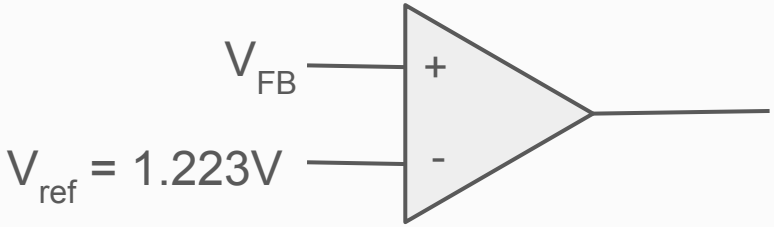

Feedback loop works as a voltage divider to an op-amp:

- Increasing R3 increases V_{out}
- Decreasing R3 decreases V_{out}
- No current (in μA) through feedback path

$$V_{out} = V_{ref}\left(1 + \frac{R_3}{R_4}\right)$$

$$12.17V = 1.223\left(1 + \frac{110k}{12.4k}\right)$$

Simulated Output Voltage Ripple

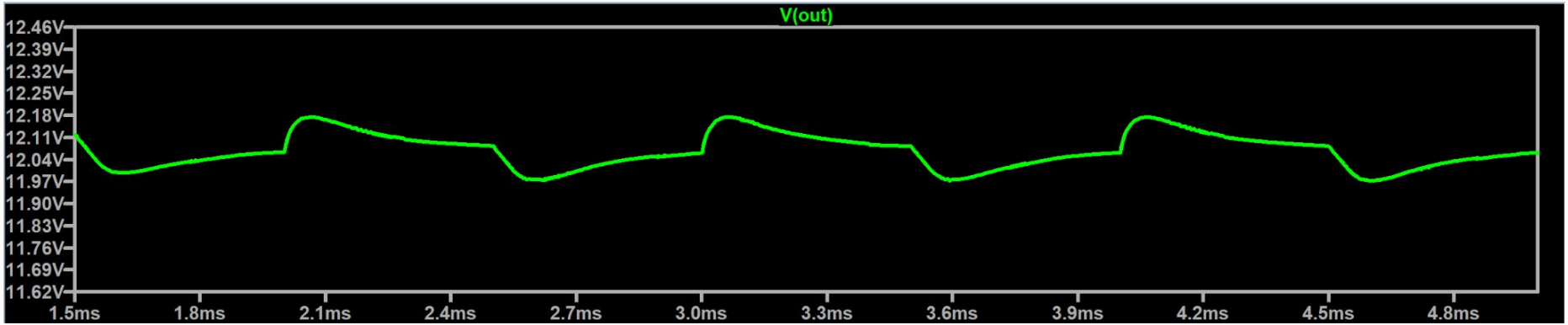

Simulated Output Current Ripple

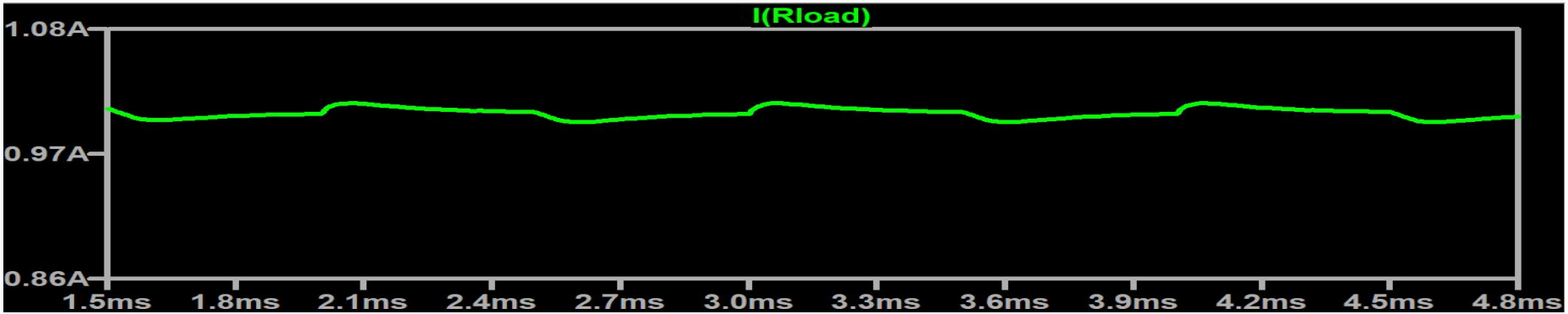

Measured Output Voltage Ripple

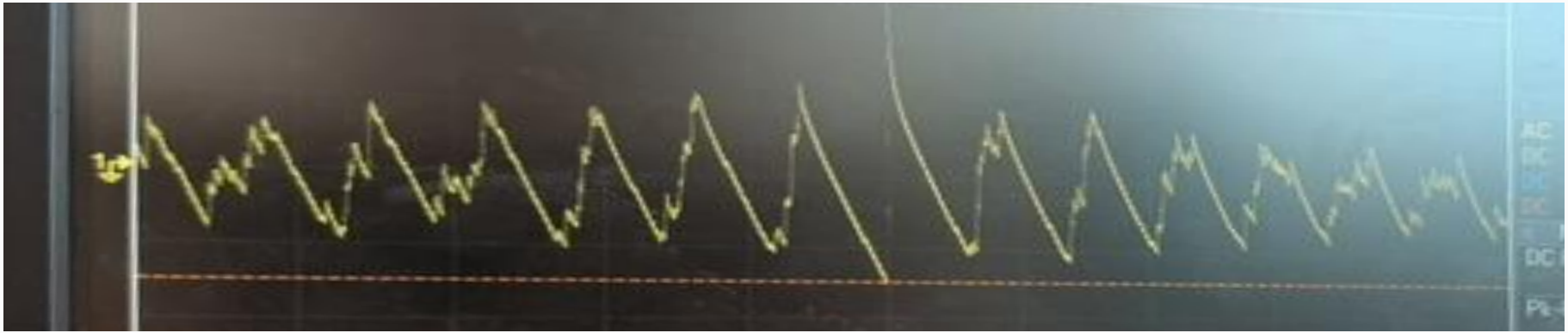

Changing both Sense 1+ and Sense 2+

Transient Response

```
.step param RS2 1m 10m 1.5m
```

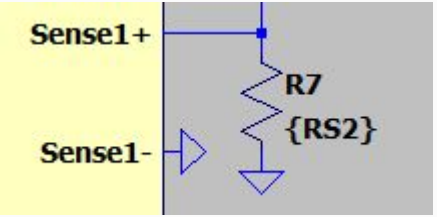

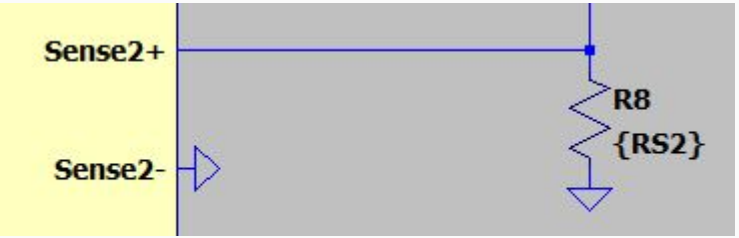

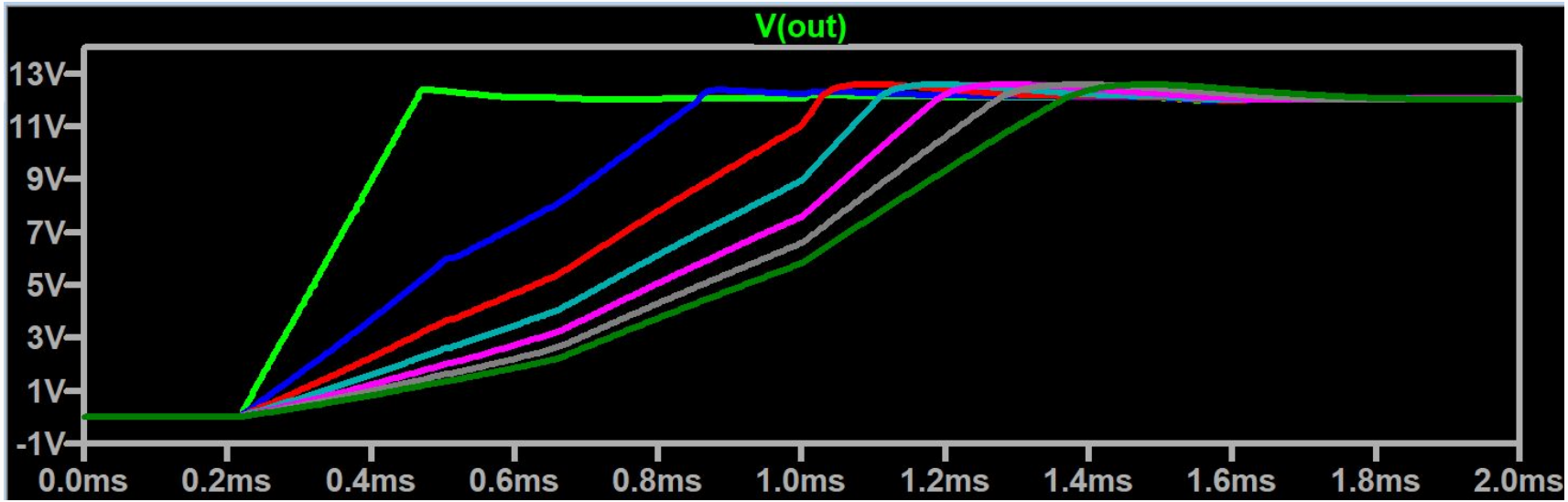

Changing both Sense 1+ and Sense 2+

Steady State

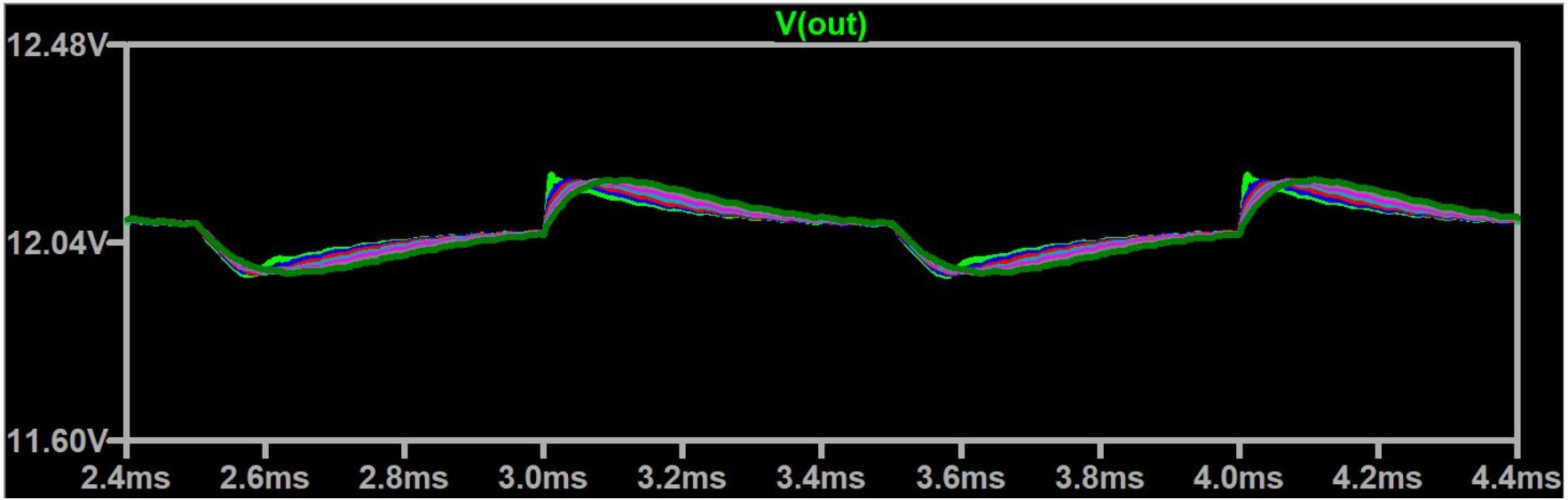

Load Regulation

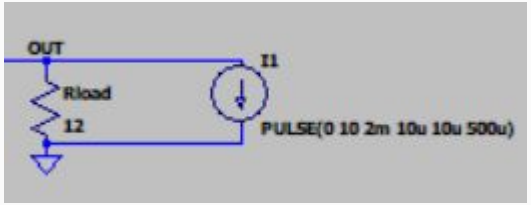

With a current pulse of 0 to 10 A, rise and fall of 10us.

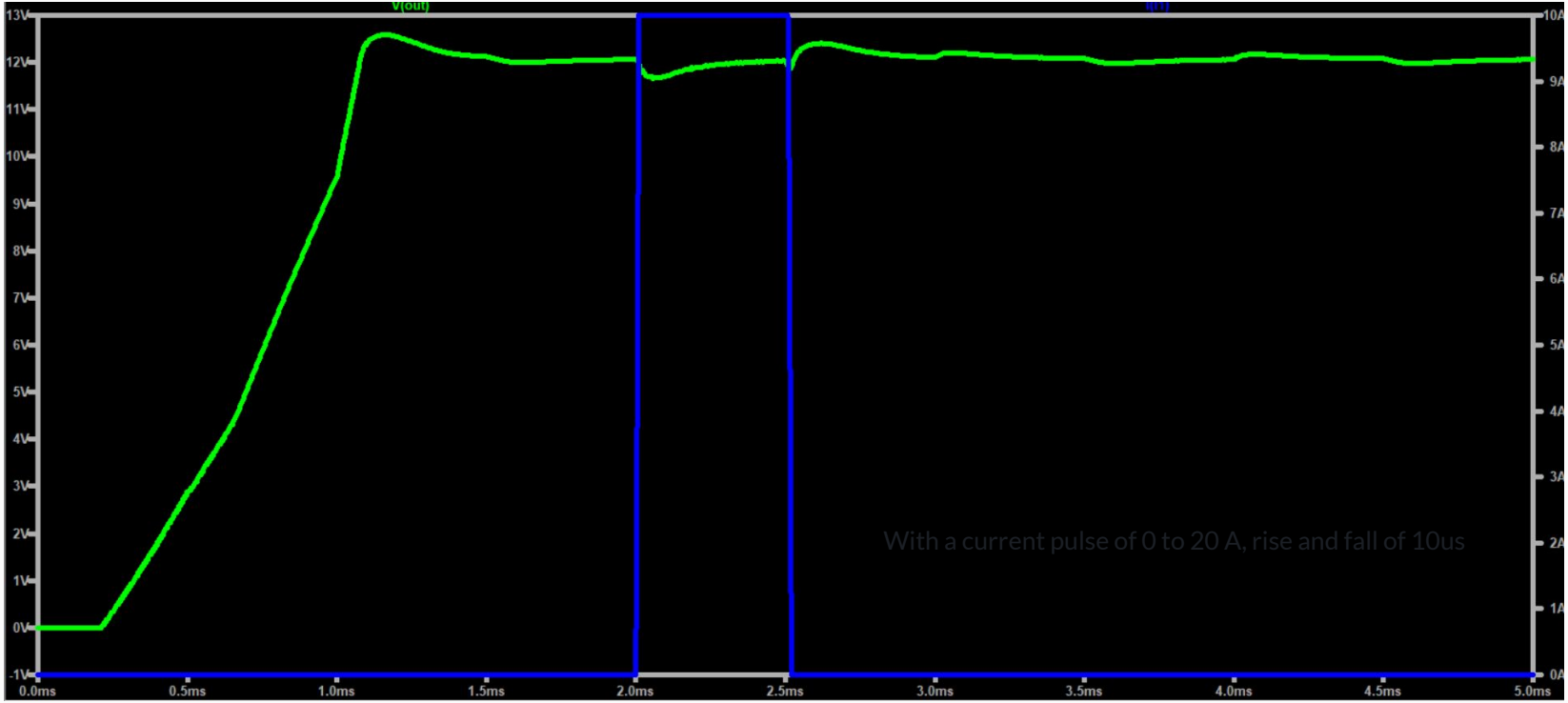

Load Regulation Analysis

- 0 to 10 A pulse (0.5 ms): Vout dips because the load jumps faster than the converter can ramp current, so Cout supplies the difference until the loop catches up.

- Return to 0 A: Vout overshoots because inductor energy + loop delay briefly over-deliver current, so Cout charges up before regulation backs off.

- Overall this behavior is expected and are normal load regulation effects from finite energy storage and finite control-loops.

Line Regulation

2-pulse input, 0-14V switching every .5ms, 0-8V switching every 1ms. 1us rise and fall time for both.

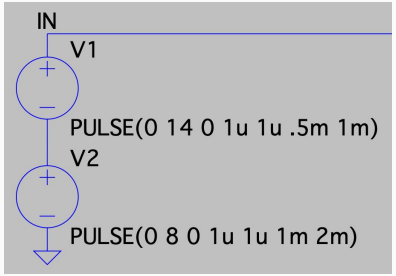

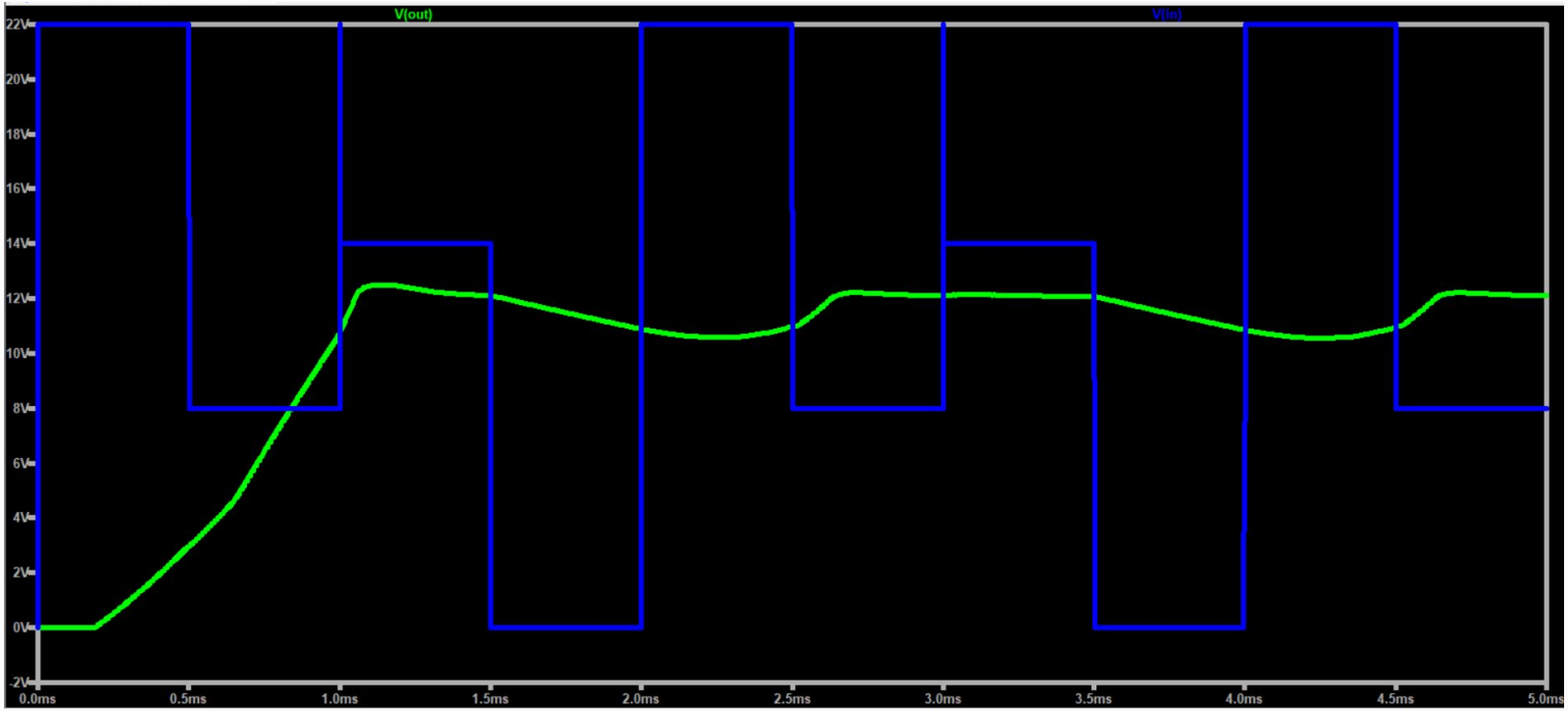

Line Regulation Analysis

- 0 to 22V (2-2.5 ms): Vout starts to change from slowly decreasing to increasing back toward 12V.
- 22V to 8V (2.5-3 ms): Vout bumps up more quickly and settles at 12V.
- 8V to 14V (3-3.5 ms): Vout stays roughly at 12V (good regulation).
- 14V to 0V (3.5-4 ms): Vout drops off as equivalent Cout discharges to try to maintain 12V at output while input is 0V.
- Overall despite intentionally disruptive Vin steps, Vout stays roughly regulated around 12V with predictable dipping and recovering behavior.

Board: LTC3862-2

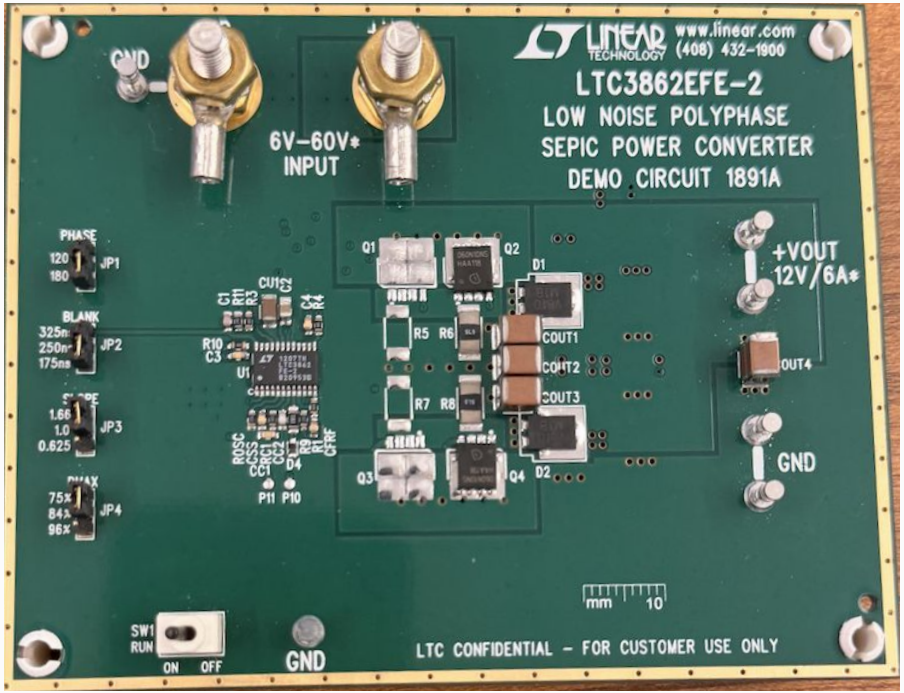

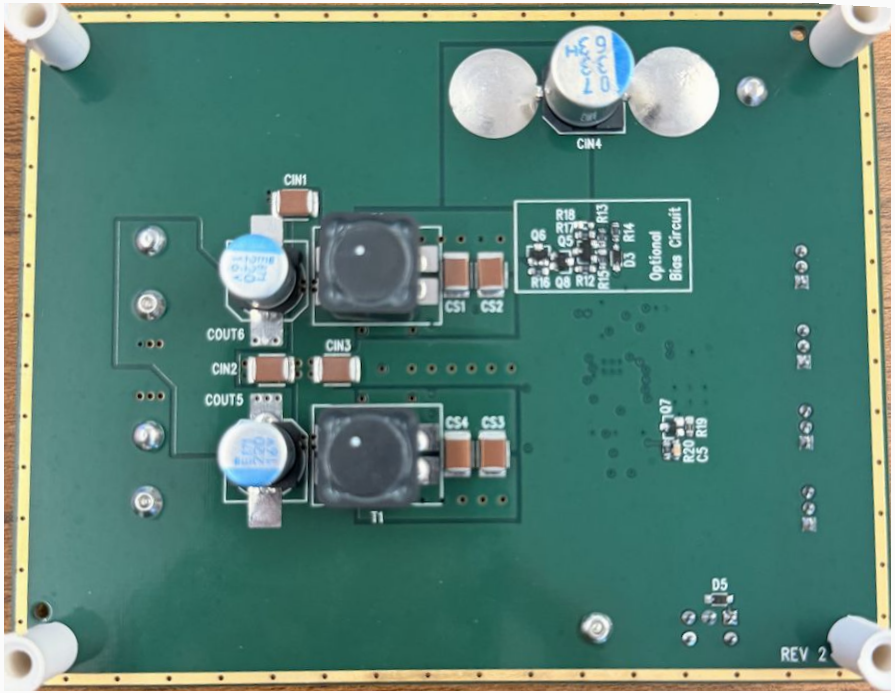

SEPIC Converter PCB - Hooked Up

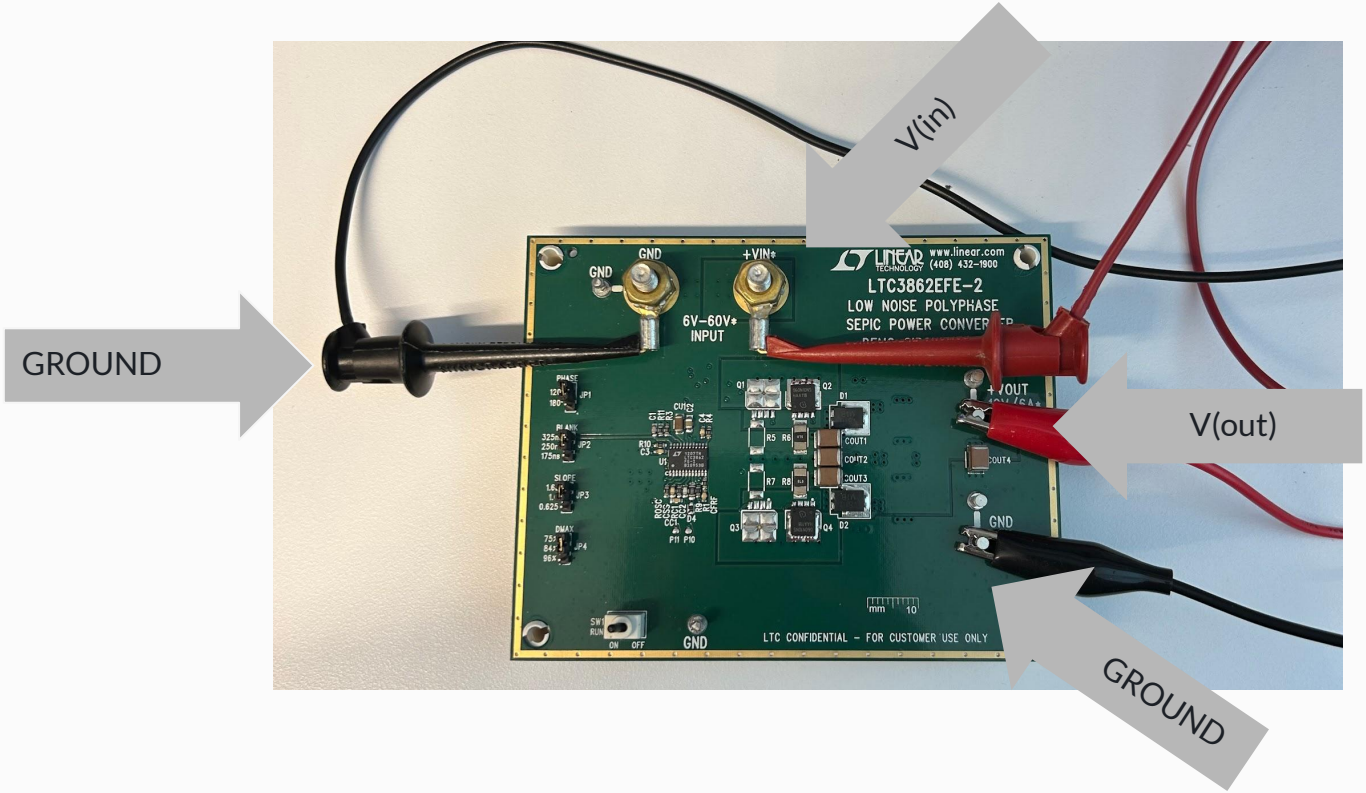

Pros & Cons

PROS:

- Step-up and step-down capability without polarity inversion.
- 2-phase (interleaving) reduces ripple current per phase, which leads to typically lower input/output ripple and potentially smaller filtering for the same power.
- External MOSFETs let you scale current/power and optimize efficiency.

CONS:

- More parts, more things to get wrong vs a normal buck, boost, or buck-boost.
- Increased design complexity and costs.
- More components leads to more heat (for our design), which results in more concern regarding thermal design.

Feedback Slide 1 - Coupled Inductors

Why our inductors were coupled:

- Lower ripple/EMI than two separate inductors.
- Smaller component footprint (one core instead of two parts).
- Cleaner switching (less ringing)

Feedback Slide 2 - More accurate Slew Rate For Line Regulation

Requested by Kamala as this demonstrates more realistic switching. We won't see the thrashing as hard with this implementation, but it does show what to expect more in real life. 6V DC offset + 11-14V pulse with rise and fall of 300us. 1ms period.

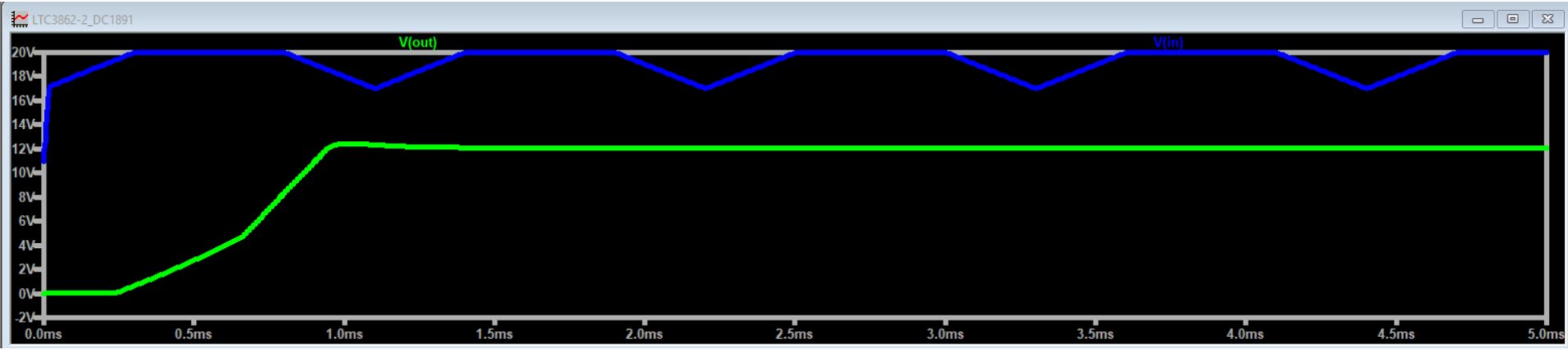

We see the output is even more steadily at 12V which is expected.

Feedback Slide 3 - What makes our converter a SEPIC

- Our two inductors function as a coupled inductor which is a key factor of a SEPIC
- The series capacitor is between both inductors, functioning as a series coupling capacitor
  - Transfers energy from the input to the output side
- From out Vout/Vin equation, out output will always stay positive and will always be greater than the input voltage (boosting) and less than the input voltage (bucking)